Project:	
Customer:	
Tru-Brix Order Number:	
Plant: CUSHWA Color:	Size: Oversize
Date: 10/26/09 By: D. ARTZ II	Page:
Drawing Name: BRICK TILE	Reference:

Tru-Brix®
Real Brick Siding

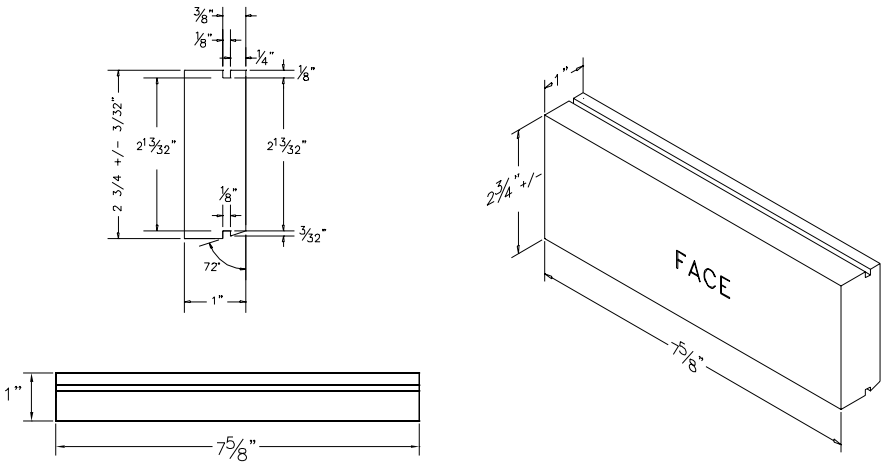

H:\ARTZ II\Tru-Brix\Standard Shapes\Brick Tile.dwg

BELOW LINE FOR REDLAND'S USE ONLY:	AUTHORIZED FOR PRODUCTION BY:	DATE: